Concept	台上型花洒龙头(带墙架) www.f-ews.com	Model No. P13-20D2-B Item No. R0903003

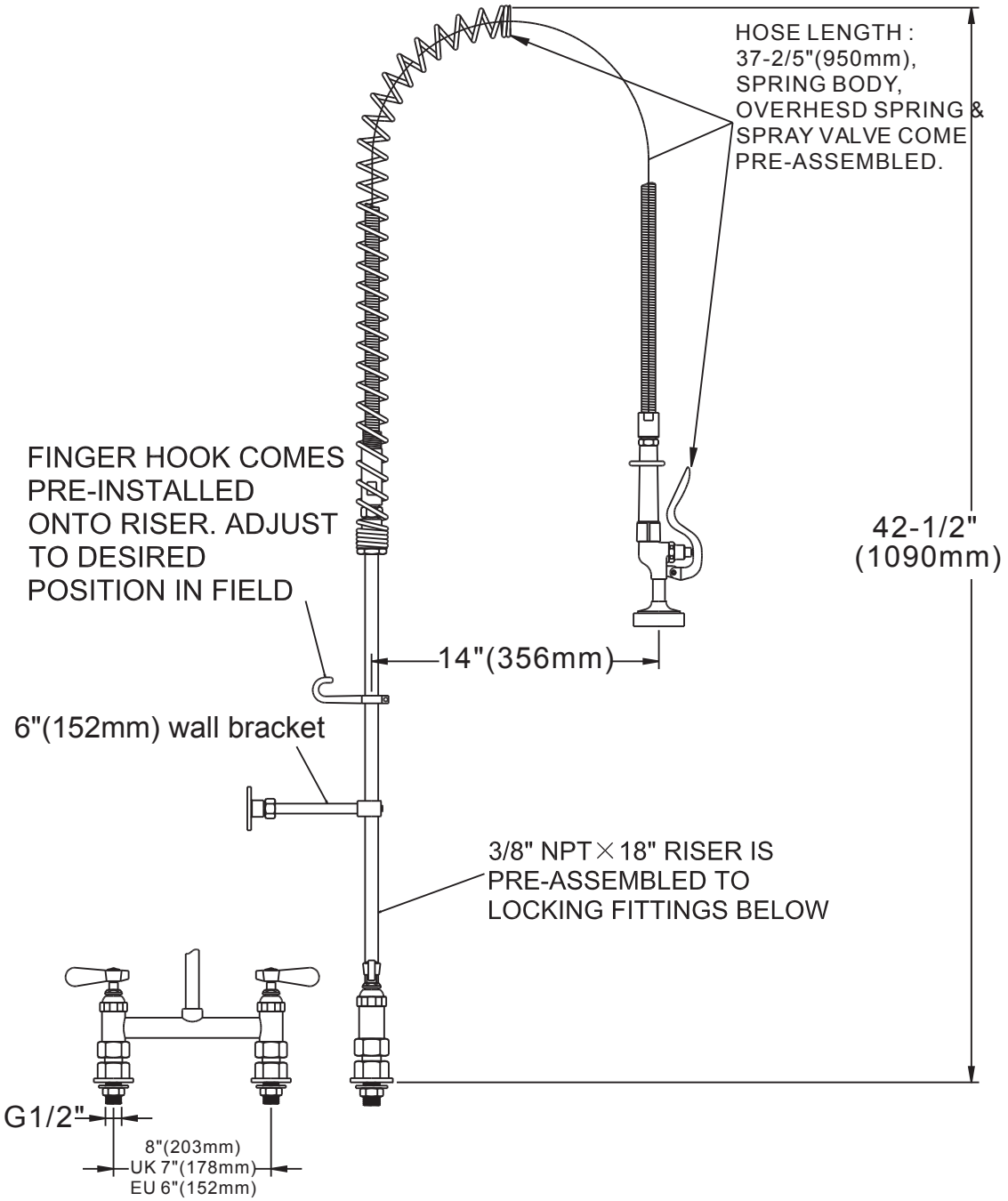

产品尺寸图

Products Specifications: 使用说明	Drawn: -	Checked: -	Approved: -
	Scale:		Date: 2013/04/11